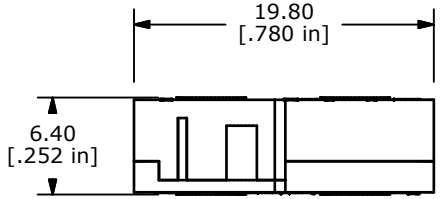

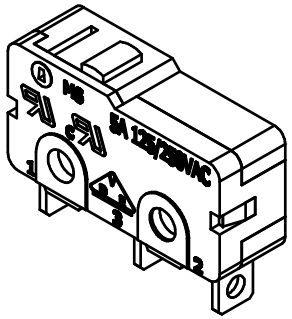

ISOMETRIC

O.P. (MM)	P.T. (MM)
8.5 ±0.3	1.1 MAX

O.P. = OPERATING POINT
P.T. = PRE-TRAVEL

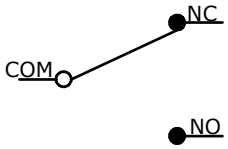

CIRCUIT: SPDT

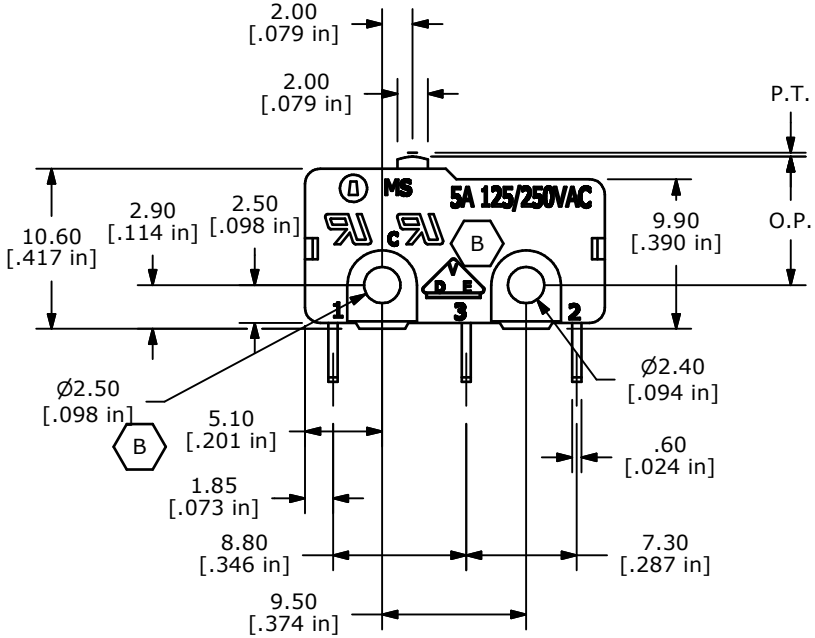

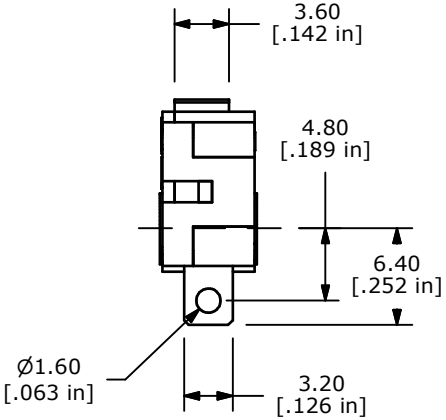

NOTES:
1. ALL DIMENSIONS IN MM [INCH]
2. GENERAL TOLERANCE: X.X=±0.4
   X.XX=±0.25
3. RATING: 5A @125/250VAC UL, CUL, VDE APPROVED
▲4. OPERATING FORCE: 60±25 GRAMS
5. OPERATING TEMP: -25˚C TO 85˚C (B)
6. ELECTRICAL LIFE: 50,000 CYCLES MIN. (B)
7. MECHANICAL LIFE: 1,000,000 CYCLES TYP.
8. INSULATION RESISTANCE: 100 MEGA-OHMS
9. DIELECTRIC STRENGTH: 1000VAC 1 MINUTE (INITAL VALUE)
10. CONTACT RESISTANCE: 100 MILLI-OHMS MAX.
11. 2002/95/EC (ROHS) COMPLIANT.
12. ▲ DENOTES CRITICAL PARAMETER. (B)

REV	PCR NO	DESCRIPTION	DATE	BY
B	15665	CHANGES NOTED	1/5/06	PH
A	15295	RELEASED FOR PRODUCTION	9/22/05	PH

THE INFORMATION CONTAINED IN THIS DOCUMENT IS PROPRIETARY TO E-SWITCH AND IS NOT TO BE COPIED OR TRANSFERRED

E-SWITCH

TITLE MS0850500F060S1A

SCALE	DATE	DR	DWG	REV
2:1	9/22/2005	PH	Q970034	B